ETH-1

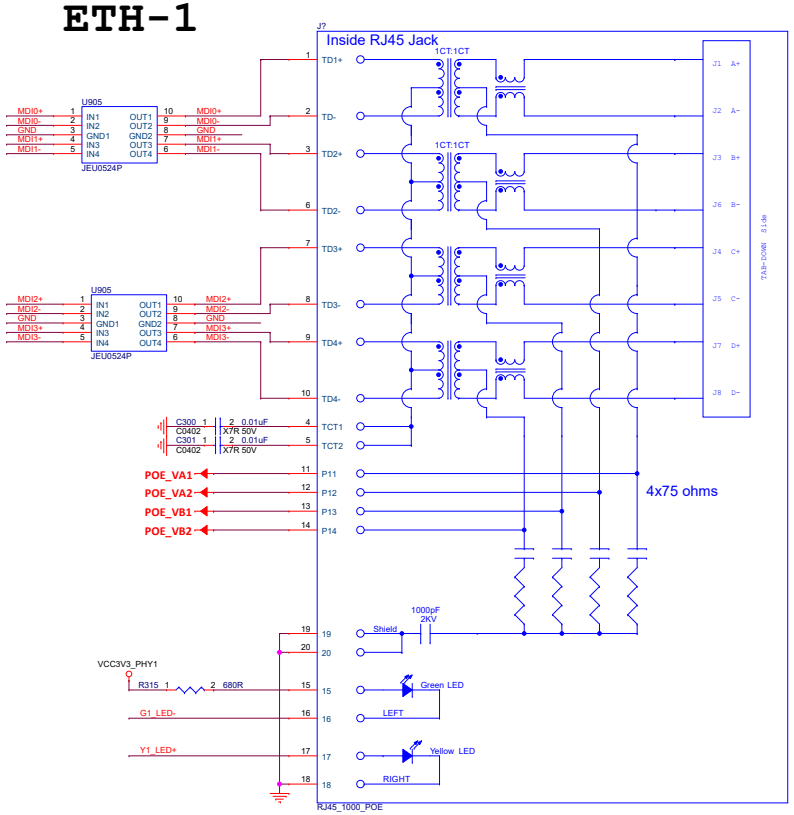

ETH-2

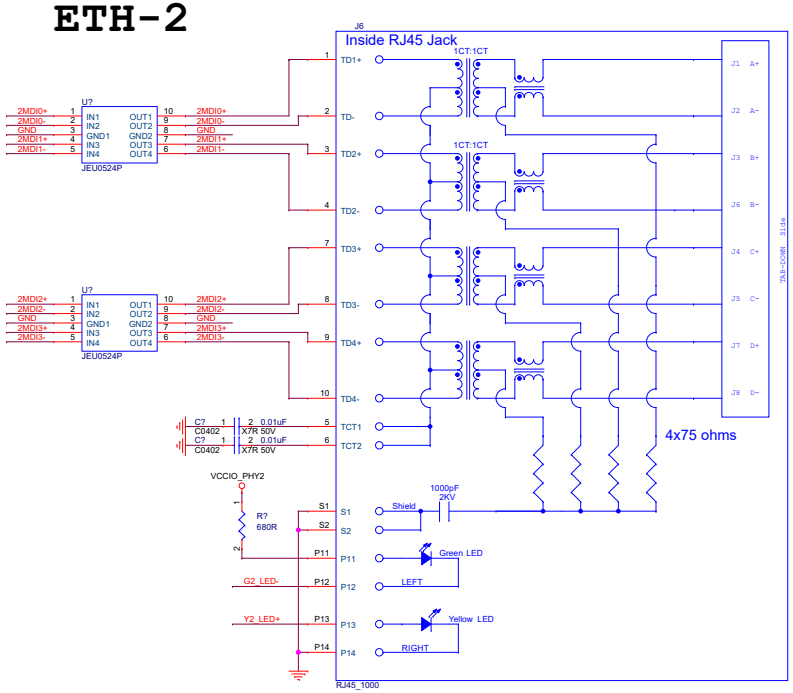

2x20PIN EXP HEADER

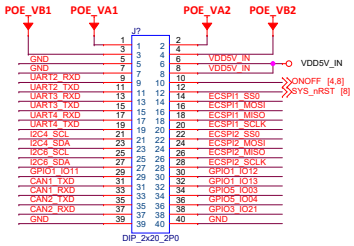

BOOT

BOOT_MODE1	BOOT_MODE0	Boot Modes
0	0	Boot From Internal Fuses
0	1	USB Serial Download
1	***0***	***USDHC3 (eMMC boot only, SD3 8-bit)***
1	1	USDHC2 (SD boot only, SD2)

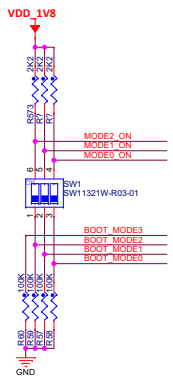

MICROSD CARD SLOT

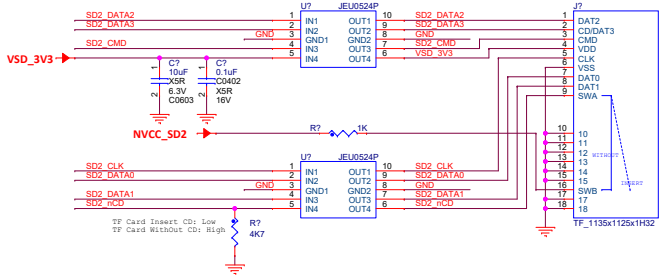

POLYHEX Beyond the Embedded Deployment	**Polyhex Technology Company Limited** www.debix.io www.polyhex.net www.polyhexpc.com
This document contains information proprietary to Polyhex and shall not be used for engineering design, procurement or manufacture in whole or in part without the express written permission of Polyhex Semiconductors.	
Designer: HW	Drawing Title: **DEBIX Infinity Reduced Schematics**
Reviewer: HW	Page Title: **Connector 1#**
Date:	Sheet of Rev

HDMI OUT

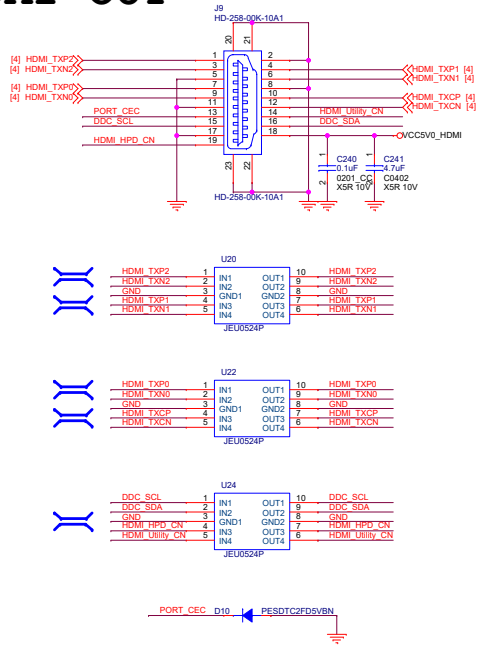

USB TYPE-C 5V IN

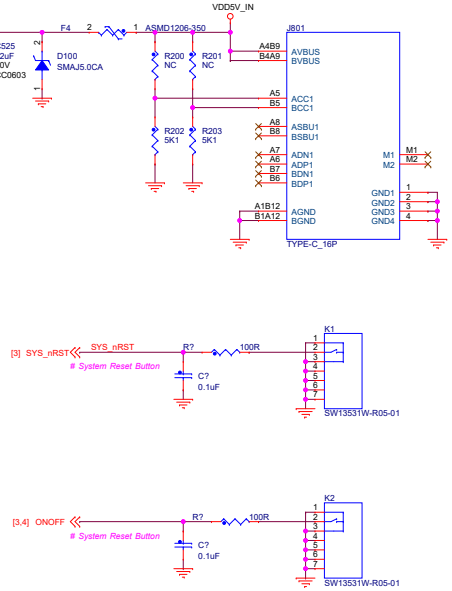

DUAL LVDS OUT

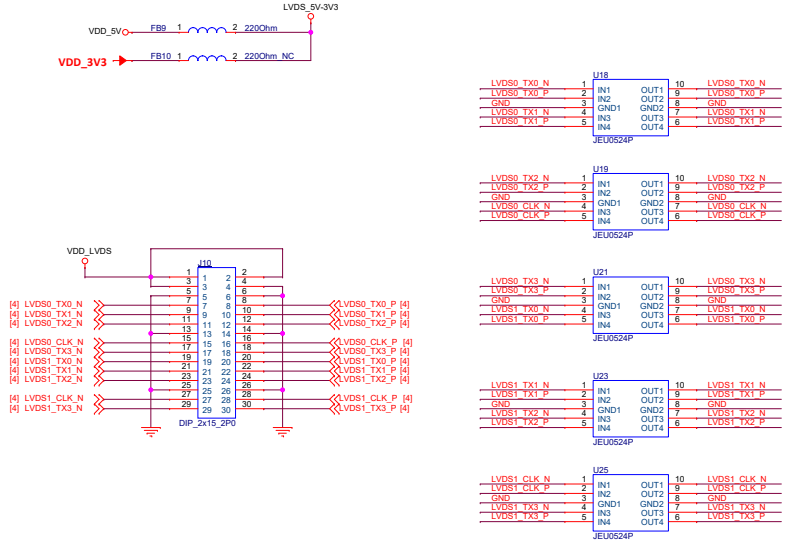

CSI1 INPUT

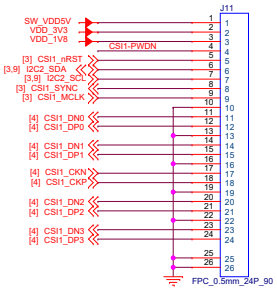

AUDIO HEADPHONE & MIC

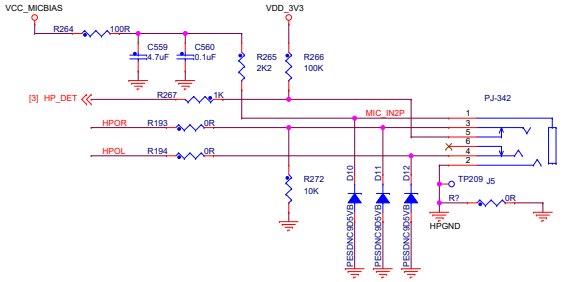

USB3.0 HOST

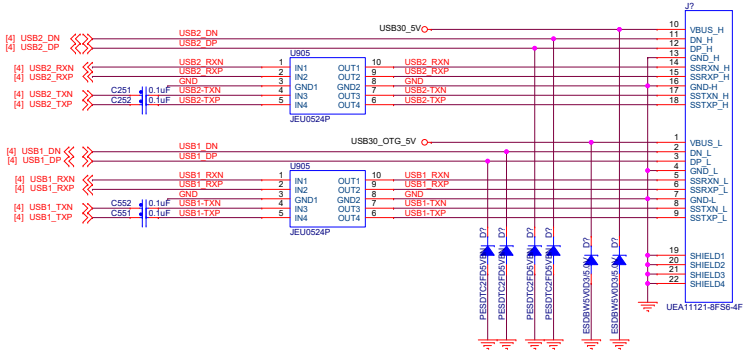

DSI OUTPUT

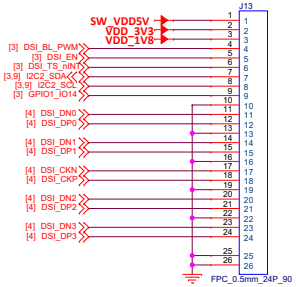

PCIE

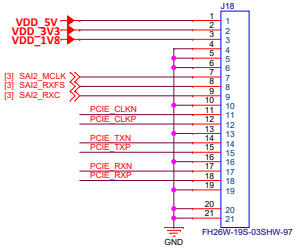

POLYHEX Beyond the Embedded Deployment	Polyhex Technology Company Limited www.debix.io www.polyhex.net www.polyhexpc.com	
This document contains information proprietary to Polyhex and shall not be used for engineering design, procurement or manufacture in whole or in part without the express written permission of Polyhex Semiconductors.		
Designer: HW	Drawing Title: DEBIX Infinity Reduced Schematics	
Reviewer: HW	Page Title: Connector 2#	
Date:	Sheet of	Rev